REMOVAL

1. **REMOVE REAR DOOR SCUFF PLATE RH (See page IR-5)**
2. **REMOVE REAR DOOR SCUFF PLATE LH (See page IR-5)**
3. **REMOVE REAR DOOR OPENING TRIM RH**
4. **REMOVE REAR DOOR OPENING TRIM LH**
5. **REMOVE TONNEAU COVER ASSEMBLY**
6. **REMOVE DECK BOARD NO. 2**
7. **REMOVE DECK BOARD SUB-ASSEMBLY (See page IR-6)**
8. **REMOVE DECK FLOOR BOX REAR (See page IR-6)**
9. **REMOVE LUGGAGE COMPARTMENT TRAY (See page IR-6)**
10. **REMOVE BACK DOOR WEATHERSTRIP**
11. **REMOVE DECK TRIM COVER REAR (See page IR-7)**
12. **REMOVE REAR SEAT CUSHION ASSEMBLY AND REAR SEATBACK ASSEMBLY**
13. **REMOVE REAR SEAT SIDE GARNISH RH (See page IR-7)**
14. **REMOVE REAR SEAT SIDE GARNISH LH (See page IR-7)**
15. **REMOVE DECK TRIM SIDE PANEL ASSEMBLY RH (See page IR-7)**
16. **REMOVE DECK TRIM SIDE PANEL ASSEMBLY LH (See page IR-7)**
17. **REMOVE REAR SEAT 3 POINT TYPE BELT ASSEMBLY**
    (a) Using a screwdriver, remove the shoulder anchor cover.
    HINT:
    Tape the screwdriver tip before use.
    (b) Remove the bolt and disconnect the rear seat 3 point type belt assembly outer (shoulder anchor side).
    (c) Remove the bolt and disconnect the rear seat 3 point type belt assembly RH (floor anchor side).

SB

INSTALLATION

1. INSTALL REAR SEAT 3 POINT TYPE BELT ASSEMBLY
NOTICE:
Do not disassemble the retractor.

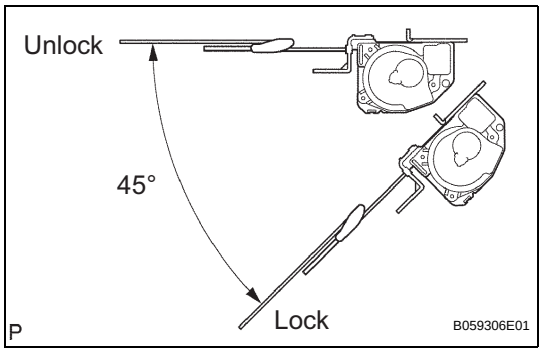

(a) Before installing the ELR, check the ELR.
  (1) Gently tilt the ELR and pull the belt. Check that the belt will not lock within 15° of tilt in all directions Then check that the belt will lock when over 45° of tilt is applied.
  If the operation is not as specified, replace the rear seat belt assembly outer.

(b) Install the rear seat belt assembly outer (retractor side) with the bolt.
Torque: for upper bolt
4.9 N*m (50 kgf*cm, 43 in.*lbf)
for lower bolt
41.2 N*m (420 kgf*cm, 30 ft.*lbf)

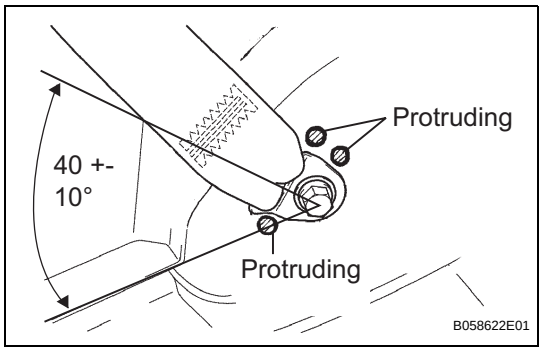

(c) Install the rear seat belt assembly outer (floor anchor side) with the bolt.
Torque: 41.2 N*m (420 kgf*cm, 30 in.*lbf)
NOTICE:
Do not make the anchor part run onto the protruding part of the floor panel.

(d) After installing the ELR, check the ELR.
NOTICE:
The check should be performed with the assembly installed.
  (1) With the belt installed, check that the belt locks when it is pulled out quickly.
  If the operation is not as specified, replace the rear seat belt assembly outer.

(e) Check the fastening function of the child restraint system.
NOTICE:
The check should be performed with the assembly installed.
  (1) When the belt is pulled put fully, the belt should automatically try to retract.
  (2) After the belt has fully retracted, the belt should be able to be pulled out and retracted again. If the operation is not as specified, replace the rear seat belt assembly outer.

2. INSTALL DECK TRIM SIDE PANEL ASSEMBLY LH

3. INSTALL DECK TRIM SIDE PANEL ASSEMBLY RH

4. INSTALL REAR SEAT SIDE GARNISH LH

5. INSTALL REAR SEAT SIDE GARNISH RH

6. INSTALL REAR SEAT CUSHION ASSEMBLY AND REAR SEATBACK ASSEMBLY

7. INSTALL DECK TRIM COVER REAR

8. **INSTALL BACK DOOR WEATHERSTRIP**
9. **INSTALL LUGGAGE COMPARTMENT TRAY**
10. **INSTALL DECK FLOOR BOX REAR**
11. **INSTALL DECK BOARD SUB-ASSEMBLY**
12. **INSTALL DECK BOARD NO. 2**
13. **INSTALL TONNEAU COVER ASSEMBLY**
14. **INSTALL REAR DOOR OPENING TRIM LH**
15. **INSTALL REAR DOOR OPENING TRIM RH**
16. **INSTALL REAR DOOR SCUFF PLATE LH**
17. **INSTALL REAR DOOR SCUFF PLATE RH**